Boise State University
ScholarWorks

College of Engineering Poster Presentations

2010 Undergraduate Research and Scholarship Conference

4-12-2010

Energy Modeling Using Feed-Forward Artificial Neural Networks

Dustyn Deakins
Department of Campus Sustainability, Boise State University

Energy Modeling Using Feed-Forward Artificial Neural Networks

Dustyn Deakins

Office of Campus Sustainability, Advised by Dr. John Gardner

The Research Goal

The Office of Campus Sustainability has been finding a variety of ways to reduce green house gas emissions here at Boise State and is planning a campus-wide energy efficiency program. We already monitor building energy use and can instantly see changes in consumption, but it is difficult to determine if changes are due to efficiency efforts or cyclical changes in school year, or an increase in enrollment, or any other actors that can distort the data. We need an energy model to give us a tool to predict energy consumption correlated with these external factors.

Building Energy Consumption

Here at Boise State the facilities department has been monitoring the power for the last few years for select buildings and is monitored every 15 minutes. For example, every 15 minutes the systems sample the power load being drawn from the building. This power load profile can be seen graphically by plotting power v.s time as in figure 1 below.

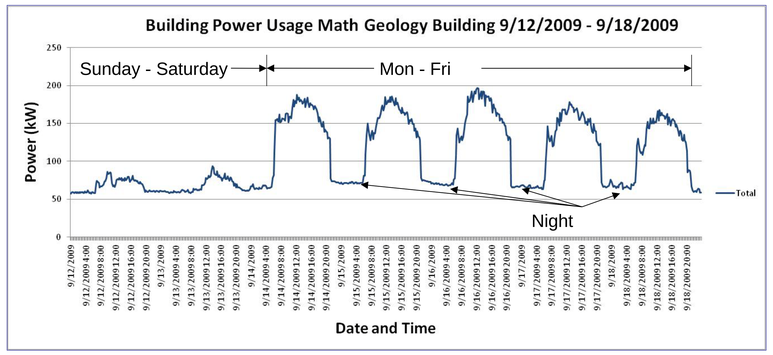

Figure 1 Building Energy Consumption Curves Math Geology Building September 12, 2009 – September 18, 2009

In figure 1 you can see the day to day and from weekend to weekday fluctuations of power. You can also see the power rising during the beginning of the day and falling towards the end of the day. This is all combination of plug load i.e. P.C., printers, vending machines, and anything else plugged into the wall and HVAC load which is heating, ventilation, and air conditioning.

How to Use the Energy Data

The Office of Campus Sustainability is researching ways to model this data mathematically or in other words, find a way to reproduce the data mathematically.

When the data is finally modeled it then can be predicted by independent input variables, such as;

- Temperature
- Humidity
- Solar Radiation
- Wind Speeds
- Occupancy Hours/Time of Day
- Occupancy of Scheduled Classes

Weather data such as temperature, humidity, solar radiation and wind speeds are collected by United States Bureau of Reclamation from a weather station across the Boise river from Boise State University. occupancy hours/time of day input variables are classified through the data itself and occupancy of scheduled classes by the registrars office.

Once a model has been developed the data then can be used to benchmark current energy consumption and in projecting the power profile into the future using those key variables to make a good comparison if any energy was saved as a result of implementing energy conservation efforts.

An example would be figure 2 below with energy projected as the orange line, actual energy as the blue line, and green line as the difference between predicted and actual as it corresponds to energy savings. This could be an example of cooling system retrofit indicative of energy savings during warmer hours of the day. Other examples of energy conservation would include,

- HVAC retrofit
- Computer standby set back
- Turning off equipment when not in use.
- Installation of new lighting
- Class scheduling modification
- HVAC set back

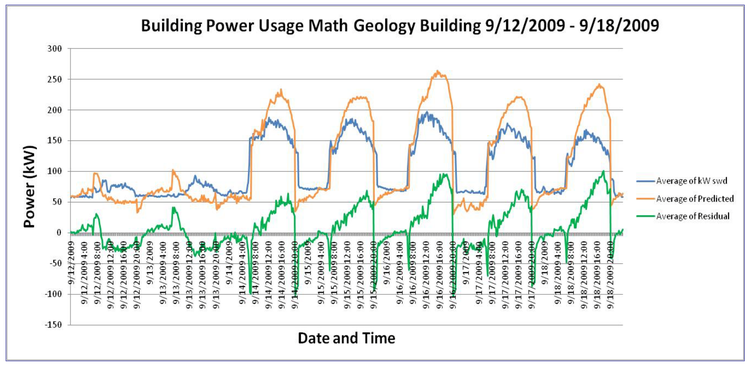

Figure 2 Building Energy Consumption Load Predicted, Actual, and Residual Math/Geology Building September 12, 2009 – September 18 , 2009

Several mathematical models exist like multiple linear regression, linear regression, Fourier series, Laplace transforms, and ANNs Artificial Neural Network. ANNs have been superior to others models and is recommended by ASHRAE, American Society Heating, Refrigeration, and Air Conditioning Engineers, for energy modeling and predicting.

ANN: A Solution to Modeling

ANN, artificial neural networks is a mathematical algorithm that can learn through a series of training/learning events. Figure 3 displays a schematic of a feed-forward neural network.

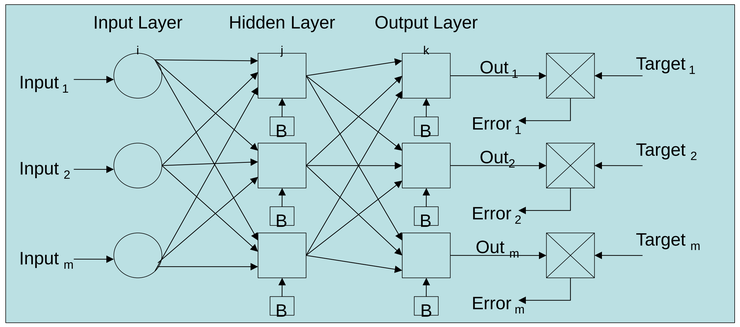

Figure 3 Artificial Neural Network Diagram

ANNs work by training a data set to "learn" the data pattern. This is called training and it applies a method called "back propagation" which is used to systematically modify the network. How it works is by sending the independent variable data one set at a time into the inputs of the network. The data is propagated through the network to the output and compared to target values. An error term is then calculated for each set. The process is then looped to reduce this error term until an acceptable error range is met. Once the network is trained then any input variables in the future will produce the trained response by the ANN and yield a model as comparison data.

Results

Figure 4 is an example of a short range ANN model with an actual power comparison.

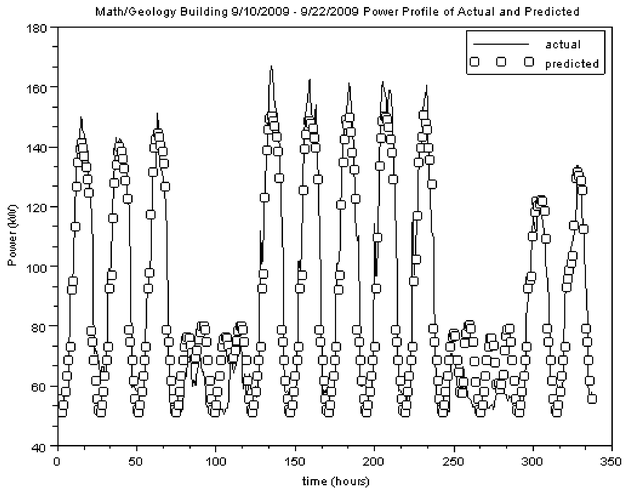

Figure 4 ANN model with actual power consumption

To date the ANN models can predict short range, i.e. <500 hours, accurately. From figure 4 this short range models statistical results are in table 1 below.

CV (Coefficent of Variance)	SSE (Sum of Squared Error)	MBE (Mean Bias Error)	R_squared	Epochs	Range (hrs)
13.85	0.56	2.68	0.95	800	193

Table 1 ANN model statistical results

What is Next

ANN results to date have been promising. While short range, 1-2 months, data training is within acceptable limits ,the long range, greater than 3 months, data training has some hurdles. Those hurdles are a few dynamic variables:

- Finals Week
- Mid Term
- Trends (unexpected shifts in power)
- Holidays

These variables are difficult to predict in that they change year to year or change unexpectedly. Finding solutions to the programming involved with ANN will soon solve most of these.

References

KREIDER, J. F., & HABERL, J. S. (1994). Predicting Hourly Building Energy Use: The Great Energy Predictor Shootout - Overview and Discussion of Results. *TRANSACTIONS- AMERICAN SOCIETY OF HEATING REFRIGERATING AND AIR CONDITIONING ENGINEERS.* 100, 1104.

ANSTETT, M., & KREIDER, J. F. (1993). Application of Neural Networking Models to Predict Energy Use. *TRANSACTIONS- AMERICAN SOCIETY OF HEATING REFRIGERATING AND AIR CONDITIONING ENGINEERS.* 99, 505.

KARATASOU, S., SANTAMOURIS, M., & GEROS, V. (2006). Modeling and predicting building's energy use with artificial neural networks: Methods and results. *Energy and Buildings.* 38, 949.

BOISE STATE UNIVERSITY College of Engineering

office of CAMPUS SUSTAINABILITY

Funded by:
- Office of Campus Sustainability