Boise State University
ScholarWorks

College of Engineering Poster Presentations

2012 Undergraduate Research and Scholarship Conference

4-16-2012

Camp Rainbow Gold: New Design

Andrew Campbell
Department of Civil Engineering, Boise State University

Marcus Rasulo
Department of Civil Engineering, Boise State University

Alex Nelson
Department of Civil Engineering, Boise State University

Jill Pruett
Department of Civil Engineering, Boise State University

Jarom Gray
Department of Civil Engineering, Boise State University

CE 483-Civil Engineering Senior Design Project
Camp Rainbow Gold: New Design

Andrew Campbell, Jarom Gray, Alex Nelson, Jill Pruett, and Marcus Rasulo
Advisors: Dr. Sondra Miller P.E., and Dr. George Murgel P.E.

Project Overview

Camp Rainbow Gold (CRG) is a summer camp for children diagnosed with cancer. The camp has seen substantial growth since its inception reaching the capacity of its current site. Therefore, CRG is exploring alternative sites. Awesome Engineering, was tasked to design a new resident camp facility to meet CRG's growing needs. A 77 acre site located two miles south of Bellevue, Idaho, and a list of facility requirements were provided as a basis for the proposed camp. Our job was to design the facilities for 350 people, according to all current codes with an emphasis on compliance with the Americans with Disabilities Act (ADA) because many of the affected children have limited mobility due to their condition and its treatment.

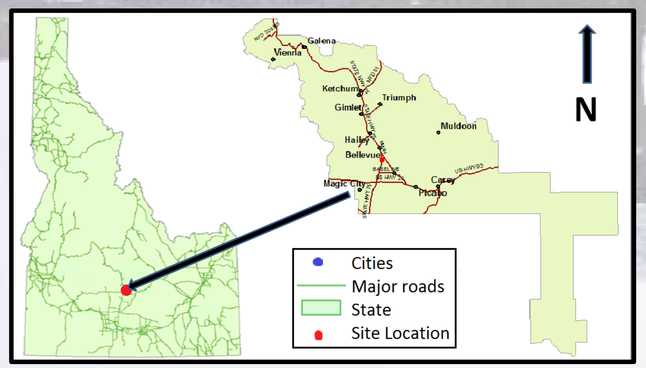

Site with respect to state and Blaine County, ID

Transportation

The transportation design requires proper dimensioning and selection of appropriate pavement and parking lot components for a design life of 15 to 20 years with 90 percent reliability.

The paved structures include:

- Primary parking area
- Ingress and egress
- Arterial roads and walkways

A cross section of the pavement design is shown below.

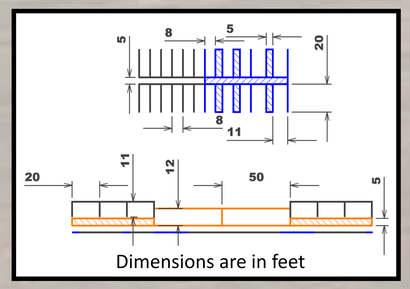

Primary parking area

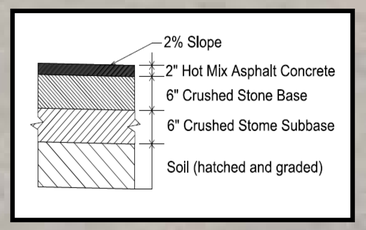

Pavement cross section

The non-paved areas include:

- Auxiliary parking area
- RV lots
- Equine parking area

Environmental

To minimize the camps environmental impact and comply with Blaine County Code, the drinking water supply and distribution as well as the wastewater piping and treatment were designed.

Drinking water supply and distribution

- Water distribution connected to existing wells
- Groundwater under maximum contaminant levels
- Two pressurized water distribution systems
  - Potable
  - Fire suppression

Wastewater piping and treatment

- Pressurized septic system
- Nutrient Pathogen Study evaluated effect on groundwater

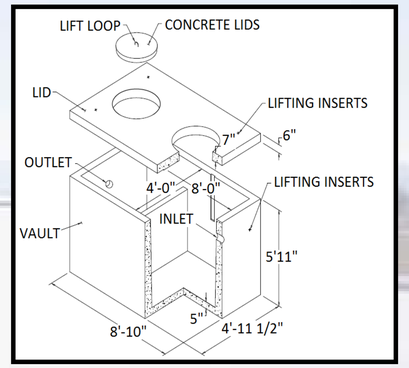

Septic tank

Camp layout

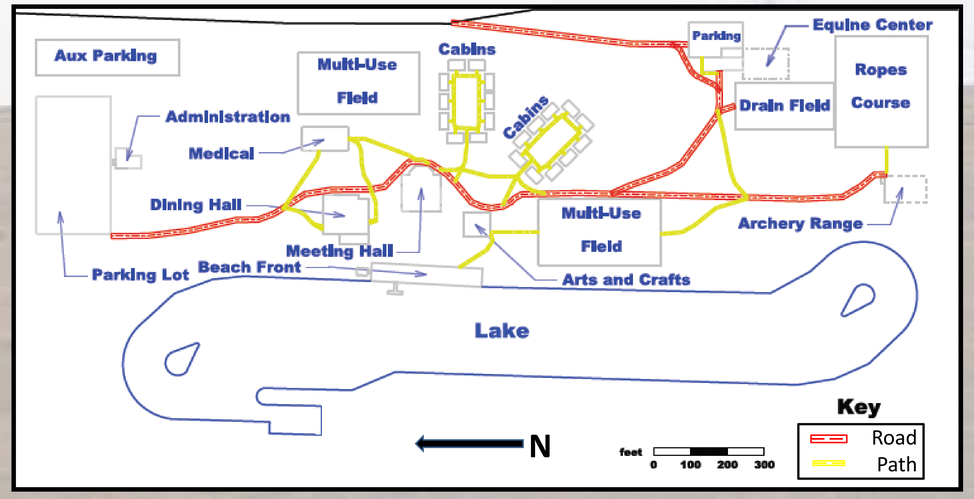

Site layout

The Camp Rainbow Gold layout is displayed above. The layout includes the following:

- Multi-use and recreational areas
- Arts and Crafts building
- Cabins
- Meeting hall
- Administration building
- Medical facility
- Dining hall
- Parking lots
- Roadways and paths
- Septic drain fields

Service Learning

Giving to the community is an integral element of all engineering disciplines. The service learning component provided an opportunity to become familiar with Camp Rainbow Gold and give back the community.

- Clothing drive to benefit the American Cancer Society and Camp Rainbow Gold
- Organized in conjunction with Student Housing
- Collection points in various campus residence halls
- Collection during final two weeks of academic year to coincide with summer move-out

Structural and Geotechnical

The structural design of the project consists of the arts and crafts facility.

- Structure will be a two story timber building
- Complies with 2009 International Building Code, and the Americans with Disabilities Act
- Structural loading calculated for dead, live, and environmental loads
- Foundation will be a reinforced concrete strip footing
- Foundation designed for allowable bearing capacity, settlement, and structural loading

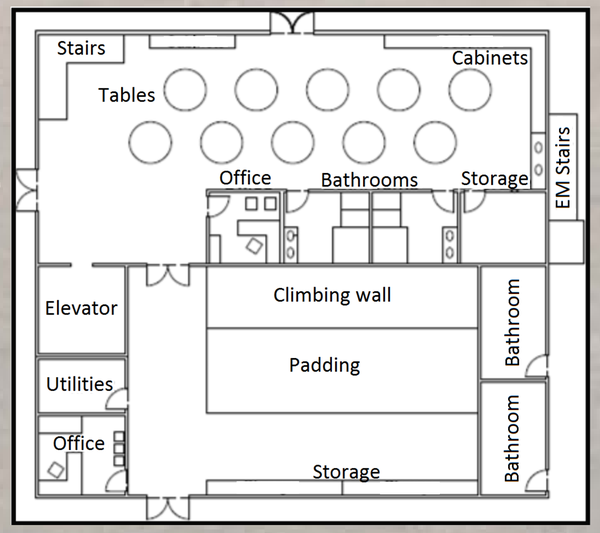

Arts and crafts facility