Civic Engagement in Action:
Hardware Dispenser Project
John D. Raff, Dave Owen, Paul Sheppard

- ►CLASS: Mechanical Engineering, Senior Design
- ►Instructor: Dr. Rudy J. Eggert
- ►Agency and Mission Statement: Arc, Inc is committed to securing for people with disabilities the opportunity to choose and realize their goals of where and how they learn, live, work, and play.
- ►Project Purpose: To help ARC workers complete tasks quicker with more efficiency.
- ►Learning goals: To learn how to complete a design from conception to delivered product.
- ►Community need addressed: Helping ARC employees to their job with more ease of movement and higher production output.

The purpose of this design project was to develop a system that will allow employees of the ARC to be able to work on a greater variety of projects and to improve their productivity. The hardware dispenser group developed a design for a tray that would help the ARC employees work quicker and more efficiently. The tray has bins to hold hardware which the supervisor loads onto the tray. The employee slides a bag over the tip of the funnel and into the clip which holds the bag in place. The worker then chooses which parts need to be in the bag and slides each one of them down the tray from the bin and into the funnel. They can then remove the bag and the task is completed.

The ARC employs physically and mentally handicapped individuals in a variety of jobs such as the labeling of containers, assembling delivery boxes, and placing small hardware parts (nuts, bolts, and washers) in plastic bags for use in assembly kits.

The current method of bagging small parts has the workers pick out individual parts from a bin or bag and place them into a collection bag. This resulted in a large amount of wasted time and frustration for the workers. Our design was intended to speed production as well as increase the number of workers who could perform these tasks.

The inspiration for our design selection came from a simple pharmacist's pill counting tray. This tool is more of a small self-contained specialized workspace, than a mechanism. Rather than build a complex machine that will perform the task automatically, this tool will simply make it far easier for the workers to do the task. Starting with a basic concept, the design evolved over several meetings with the staff at the ARC.

Our goal was to provide six production units to the ARC for immediate use. All of the units have interchangeable bins for hardware storage and dispensing. Two of the units have a smaller tip for a specialized contract.

This design proved to help the workers at the ARC do the job at a fraction of the time with simpler movements.

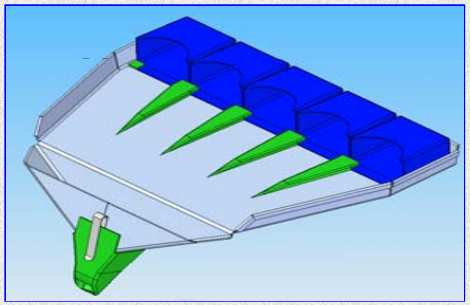

Special Thanks to:
Malcolm Diamond,
Applied Technology
Dr. Stephen Tennyson,
College of Engineering